# Landsat 7 Processing System CDR

## Agenda

| | |
|---|---|
| • Introduction | J. Henegar |
| • Design Overview | R. Schweiss<br>T. Aslam |
| • LPS Hardware Architecture | C. Brambora |
| • LPS Operational Scenarios | R. Schweiss |
| • SWCI Detailed Design | J. Hosler<br>D. Crehan |
| • System Testing | J. Henegar |
| • Acceptance Testing | EDC |
| • Facilities | EDC |
| • Conclusion | J. Henegar |

## The LPS Hardware Architecture

- Operational Hardware Configuration
- LPS Hardware Architecture Block Diagram
- LPS Raw Data Capture
- LPS Level 0R Data Flow
- LPS System Sizing Analysis
- LPS RMA Results

# Landsat 7 Processing System CDR

## The LPS Architecture (cont.)

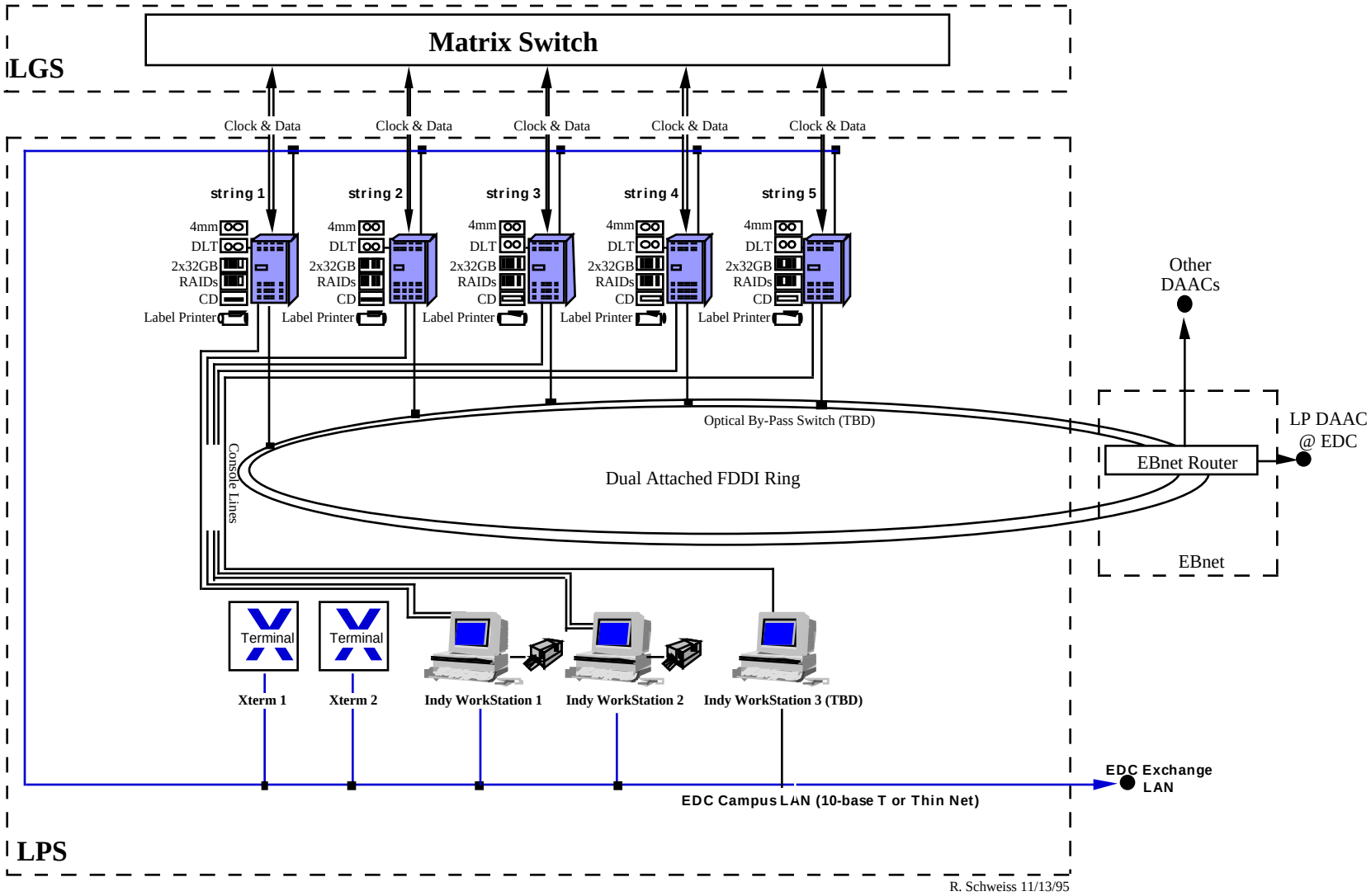


R. Schweiss 11/13/95

**Operational Hardware Configuration**

# Landsat 7 Processing System CDR

## The LPS Architecture (cont.)

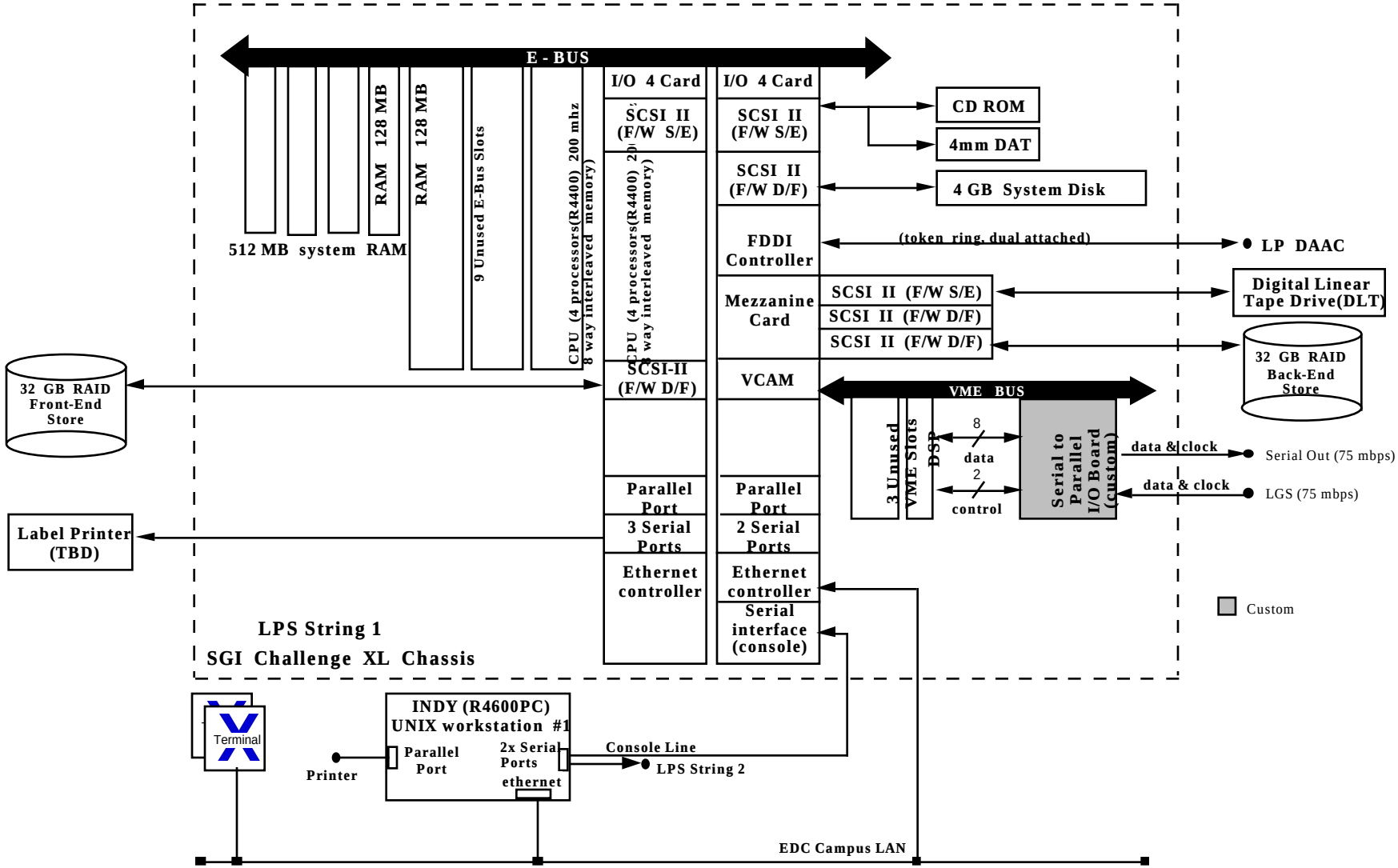


LPS Hardware Architecture Block Diagram

# The LPS Architecture (cont.)

**Specifics:**

- **Everest Bus**
  - **1.2 GB/s E-Bus System Back Plane**
- **CPU**
  - **200 MHz. R4400 w/ 4MB on board Cache/CPU**
  - **187 MIPS/CPU**
- **Memory**
  - **512 MB 8 way interleaved (Expandable to 16 GB)**
- **I/O 4 Boards**
  - **Up to 5 20 MB/s SCSI 2 Differential Fast and Wide Ports per I/O 4 Card**
  - **Dual Attached FDDI Interface**
  - **4 Serial, 1 Parallel, and 1 Ethernet Interface per I/O 4 Card**
  - **VME Channel Adapter Module (VCAM)**
- **VME 64**
  - **Built in 5 slot 9U height VME 64 back plane**
  - **Supports D32 and D64 block mode transfers**
  - **40MB/s transfer speeds using D32 (50 MB/s with D64)**

# Landsat 7 Processing System CDR

## The LPS Architecture (cont.)

- **Ciprico RAID**
  - **–8+1 Configuration Featuring 4 GB Barracuda Disk Drives for a total capacity of 32GB**
  - **–Level 3 RAID**
  - **–Read/Write Rate of 18 MB/s**
  - **–Redundant Power Supplies**
  - **–Hot Swap Capability**
- **Digital Linear Tape (DLT) Drive**
  - **–SCSI 2 Interface**
  - **–10 Mb/s transfer rate (20 Mbps compressed)**
  - **–10 GB Capacity (20 GB compressed)**
- **INDY R4600PC UNIX Workstation**
  - **–100 Mhz R4600 Processor**
  - **–High Resolution (1280x1024) Color Graphics Capability**
  - **–Console functionality for 2 Challenge XLs**
  - **–Facilitates the moving window display**
- **NCD X-Term**
  - **–Low Cost High Resolution Color Graphics**
  - **–Provides X-Window Environment for Operator Interface**

# Landsat 7 Processing System CDR

## LPS RAW DATA CAPTURE

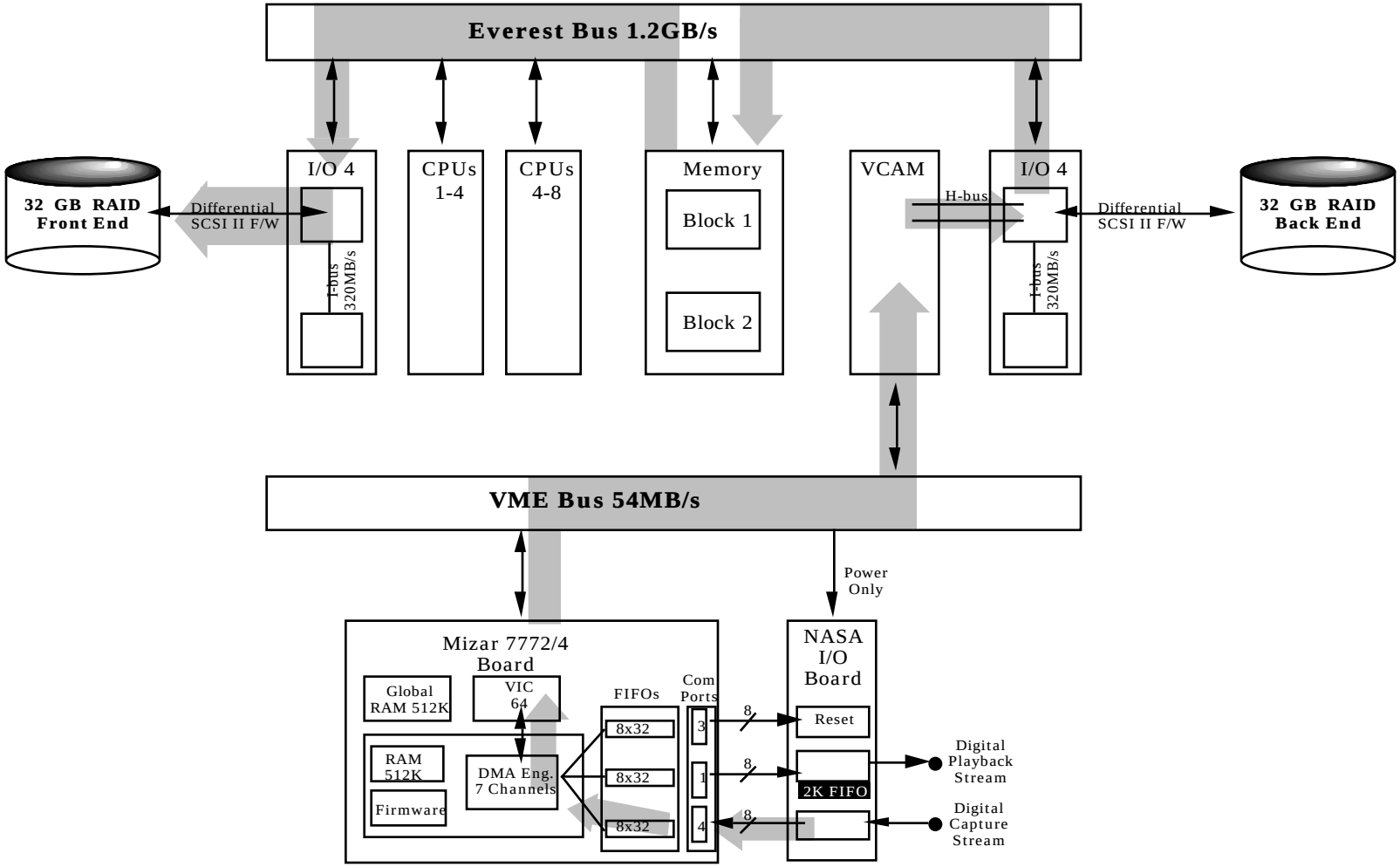


Block Diagram: Raw Data Capture

# Landsat 7 Processing System CDR

# LPS Level 0R Data Flow

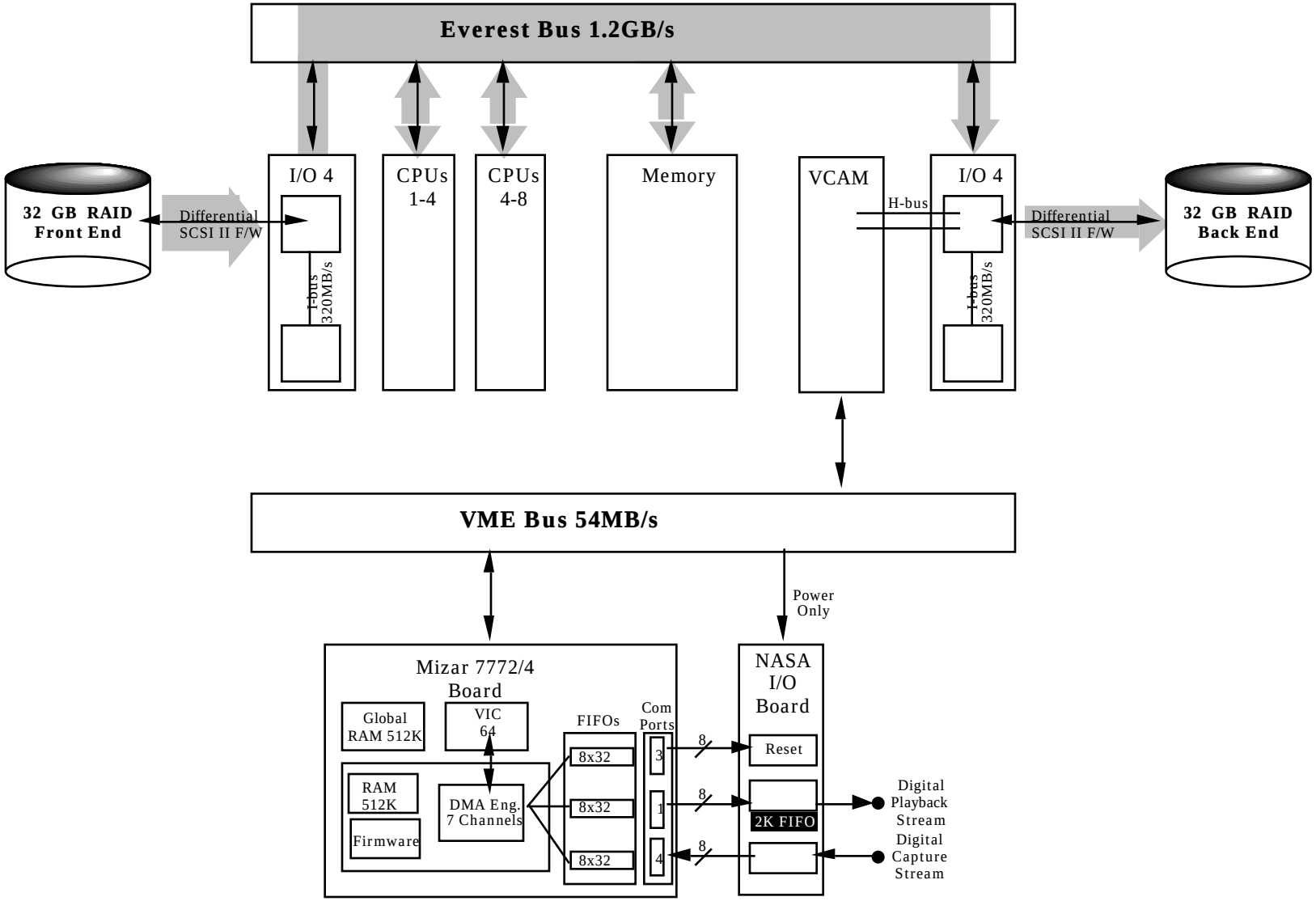


Block Diagram: Process data to Level 0R

# The LPS Architecture (cont.)

## LPS System Sizing Analysis -One LPS String

| | SDR | CDR | Percent Available Margin |
|---|---|---|---|
| • Raw Data Storage | 19.125GB / 3 contacts | | |
| 0 Degree Acq. Circle | | 35.25 min (19.8 GB) | 38 % |
| 3 Degree Acq. Circle | | 29.50 min (16.6 GB) | 48 % |
| 5 Degree Acq. Circle | | 25.59 min (14.4 GB) | 55 % |
| • 30-day Storage Media: | 6.4 GB / 3 contacts | 6.4 GB / 3 contacts | N/A |
| • Output File Storage: | 17.7 GB / 3 contacts | 20.2 GB / 3 contacts | 36.8% |
| • Output Data Transfer Rate: | 10 Mbps | 10Mbps | 60 % |
| • Processor Size: | 806 MIPS | 789 MIPS (nominal) | 39 % |
| | | 900 MIPS (worst case) | 31 % |
| • Processors | 6 | 7 | 12 % |
| • Main Memory: | 675 MB | 223MB | 55 % |
| • System Bus Load: | 95 MBPS | 95 MBPS | 92 % |
| – VME Bus Load | 9.3 MBPS | 9.3 MBPS | 83 % |

# LPS RMA Results

- RMA Analysis - Assumptions
  - Total 5 LPS strings; 4 are used in operations
  - SGI Challenge XL with embedded VME, COTS and custom HW
  - Orbit Period: 99 minutes
  - Contact Period: 14 minutes
  - String switch over Time: 30 minutes
  - RMA Calculated Over 10,000 Hours
  - String MTBF: 1751 Hours

- RMA Analysis - (Five Strings)

| | SDR | CDR |
|---|---|---|
| – Number of LPS downtimes: | 22.85 Hours | 21.70 Hours |
| – Average Downtime: | 20.94 Hours | 10.85 Hours |
| – System Availability (Ao): | 0.997 | .998 |
| – MTTRes: | 55 Minutes | 30 Minutes |

See Back up Slides for more information

# Backup Slides

# Backup Slide: RMA Calculations

| MTTRes | SDR(min) | CDR(min) |
|---|---|---|
| Time to Detect String Problem: | 5 | 1 |
| Time to Obtain String: | 10 | 9 |
| Time to Bring-up LPS | 15 | 5 |
| Time to Test LPS | 10 | 5 |
| Time to Test w/ LGS/LP DAAC | 15 | 10 |
| Switchover/Restore Time: | 55 | 30 |
| Time to Wait for next Pass: | 21 | 46 |

$$MTBF_{LPS_Single_String} = \sum 1/\ MTBF_{Each_Component}$$

$$MTTR_{\min utes} = 5^{''}_{Detect} + 10^{''}_{Obtain_String} + 15^{''}_{Bring_String_up} + 10^{''}_{Test} + 15^{''}_{Test_w/(LGS\&DAAC)} = 55_{\min utes}$$

$$Avg_Dwn_Time = (4_{Strings} * 10{,}000_{Hrs} * MTTR_{\min utes}) / MTBF_{LPS_Single_String} = 1193.68$$

$$A_o = (10{,}000_{Hrs} - 1{,}193.68_{\min} / 60_{\min/hr}) / 10{,}000_{Hrs} = .99801$$